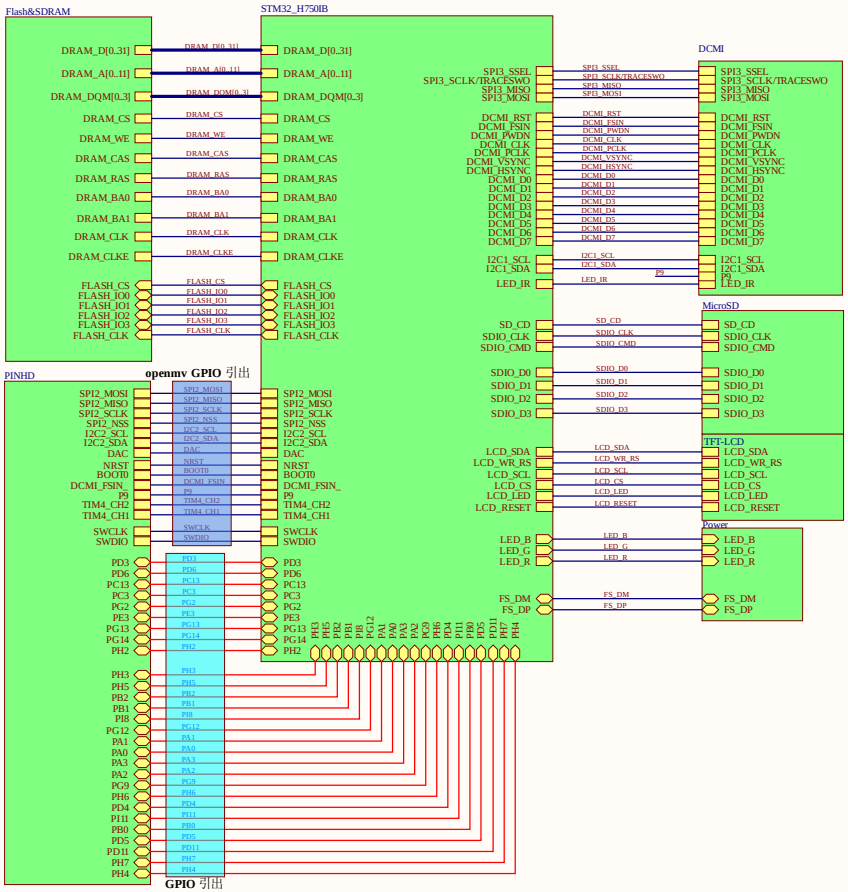

Title		
Size: B	Number	Revision
Date: 7/21/2024	Sheet of	
File: E:\openMV\..\Openmv_Plus_Top.SchDoc	Drawn By:	

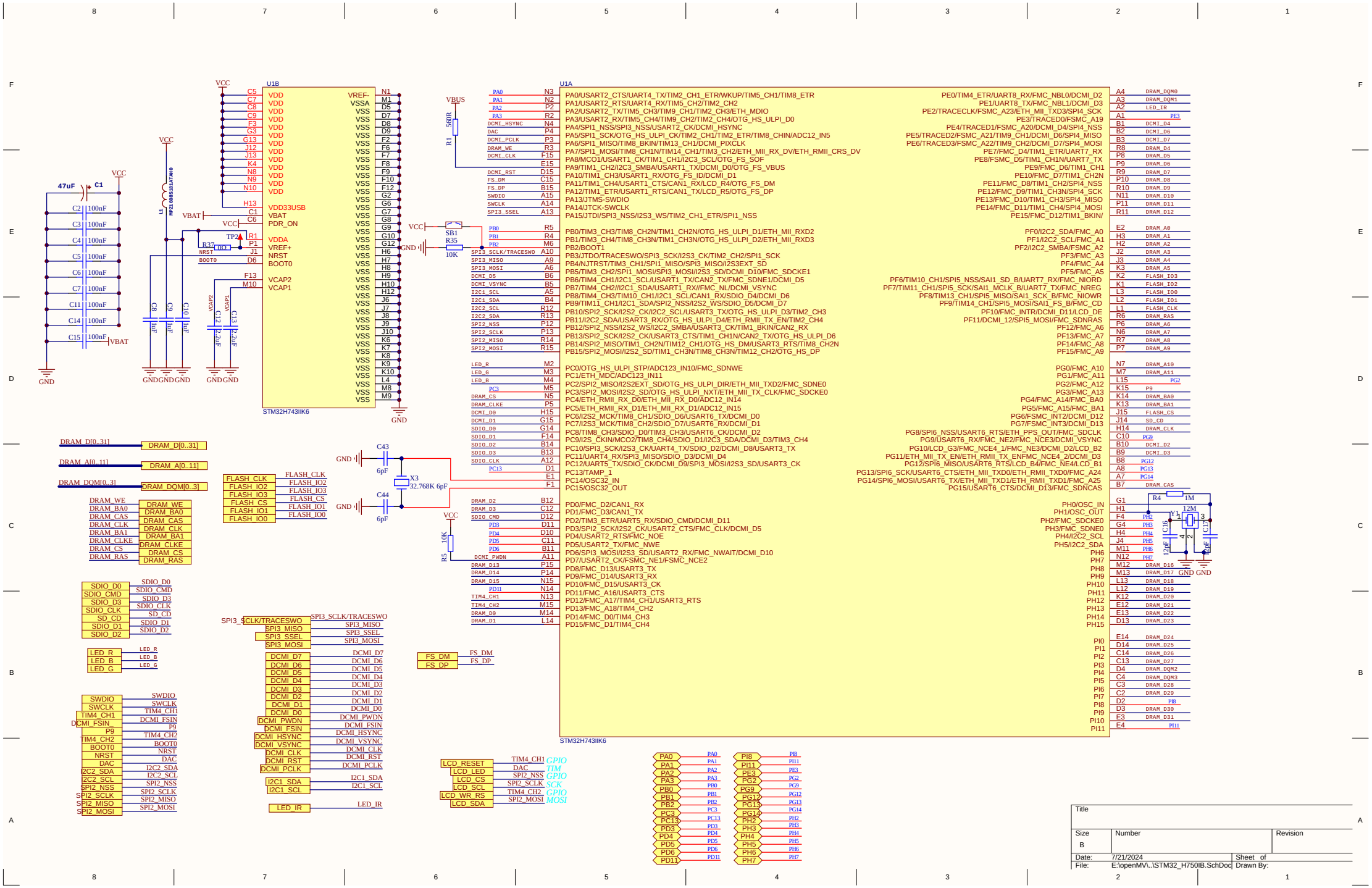
U1B
STM32H743IIK6
U1A
STM32H743IIK6
VCC
VBAT
VBUS
GND
47uF
C1
C2 100nF
C3 100nF
C4 100nF
C5 100nF
C6 100nF
C7 100nF
C11 100nF
C14 100nF
C15 100nF
L1
MPZ1608S151AT4H0
C8 1uF
C9 1uF
C10 1uF
C12 2.2uF
C13 2.2uF
R37 10K
TP2
R1 560R
SB1
R35 10K
R5 10K
C43 6pF
C44 6pF
X3 32.768K 6pF
R4 1M
Y1 12M
C16 12pF
C17 12pF
DRAM_D[0..31]
DRAM_A[0..11]
DRAM_DQM[0..3]
DRAM_WE
DRAM_BA0
DRAM_CAS
DRAM_CLK
DRAM_BA1
DRAM_CLKE
DRAM_CS
DRAM_RAS
FLASH_CLK
FLASH_IO2
FLASH_IO3
FLASH_CS
FLASH_IO1
FLASH_IO0
SDIO_D0
SDIO_CMD
SDIO_D3
SDIO_CLK
SD_CD
SDIO_D1
SDIO_D2
LED_R
LED_B
LED_G
SPI3_SCLK/TRACESWO
SPI3_MISO
SPI3_SSEL
SPI3_MOSI
DCMI_D7
DCMI_D6
DCMI_D5
DCMI_D4
DCMI_D3
DCMI_D2
DCMI_D1
DCMI_D0
DCMI_PWDN
DCMI_FSIN
DCMI_HSYNC
DCMI_VSYNC
DCMI_CLK
DCMI_RST
DCMI_PCLK
I2C1_SDA
I2C1_SCL
LED_IR
FS_DM
FS_DP
SWDIO
SWCLK
TIM4_CH1
DCMI_FSIN
P9
TIM4_CH2
BOOT0
NRST
DAC
I2C2_SDA
I2C2_SCL
SPI2_NSS
SPI2_SCLK
SPI2_MISO
SPI2_MOSI
LCD_RESET
LCD_LED
LCD_CS
LCD_SCL
LCD_WR_RS
LCD_SDA
GPIO
TIM
SCK
MOSI
PA0/USART2_CTS/UART4_TX/TIM2_CH1_ETR/WKUP/TIM5_CH1/TIM8_ETR
PA1/USART2_RTS/UART4_RX/TIM5_CH2/TIM2_CH2
PA2/USART2_TX/TIM5_CH3/TIM9_CH1/TIM2_CH3/ETH_MDIO
PA3/USART2_RX/TIM5_CH4/TIM9_CH2/TIM2_CH4/OTG_HS_ULPI_D0
PA4/SPI1_NSS/SPI3_NSS/USART2_CK/DCMI_HSYNC
PA5/SPI1_SCK/OTG_HS_ULPI_CK/TIM2_CH1/TIM2_ETR/TIM8_CHIN/ADC12_IN5
PA6/SPI1_MISO/TIM8_BKIN/TIM13_CH1/DCMI_PIXCLK
PA7/SPI1_MOSI/TIM8_CH1N/TIM14_CH1/TIM3_CH2/ETH_MII_RX_DV/ETH_RMII_CRS_DV
PA8/MCO1/USART1_CK/TIM1_CH1/I2C3_SCL/OTG_FS_SOF
PA9/TIM1_CH2/I2C3_SMBA/USART1_TX/DCMI_D0/OTG_FS_VBUS
PA10/TIM1_CH3/USART1_RX/OTG_FS_ID/DCMI_D1
PA11/TIM1_CH4/USART1_CTS/CAN1_RX/LCD_R4/OTG_FS_DM
PA12/TIM1_ETR/USART1_RTS/CAN1_TX/LCD_R5/OTG_FS_DP
PA13/JTMS-SWDIO
PA14/JTCK-SWCLK
PA15/JTDI/SPI3_NSS/I2S3_WS/TIM2_CH1_ETR/SPI1_NSS
PB0/TIM3_CH3/TIM8_CH2N/TIM1_CH2N/OTG_HS_ULPI_D1/ETH_MII_RXD2
PB1/TIM3_CH4/TIM8_CH3N/TIM1_CH3N/OTG_HS_ULPI_D2/ETH_MII_RXD3
PB2/BOOT1
PB3/JTDO/TRACESWO/SPI3_SCK/I2S3_CK/TIM2_CH2/SPI1_SCK
PB4/NJTRST/TIM3_CH1/SPI1_MISO/SPI3_MISO/I2S3EXT_SD
PB5/TIM3_CH2/SPI1_MOSI/SPI3_MOSI/I2S3_SD/DCMI_D10/FMC_SDCKE1
PB6/TIM4_CH1/I2C1_SCL/USART1_TX/CAN2_TX/FMC_SDNE1/DCMI_D5
PB7/TIM4_CH2//I2C1_SDA/USART1_RX//FMC_NL/DCMI_VSYNC
PB8/TIM4_CH3/TIM10_CH1/I2C1_SCL/CAN1_RX/SDIO_D4/DCMI_D6
PB9/TIM11_CH1/I2C1_SDA/SPI2_NSS/I2S2_WS/SDIO_D5/DCMI_D7
PB10/SPI2_SCK/I2S2_CK/I2C2_SCL/USART3_TX/OTG_HS_ULPI_D3/TIM2_CH3
PB11/I2C2_SDA/USART3_RX/OTG_HS_ULPI_D4/ETH_RMII_TX_EN/TIM2_CH4
PB12/SPI2_NSS/I2S2_WS/I2C2_SMBA/USART3_CK/TIM1_BKIN/CAN2_RX
PB13/SPI2_SCK/I2S2_CK/USART3_CTS/TIM1_CH1N/CAN2_TX/OTG_HS_ULPI_D6
PB14/SPI2_MISO/TIM1_CH2N/TIM12_CH1/OTG_HS_DM/USART3_RTS/TIM8_CH2N
PB15/SPI2_MOSI/I2S2_SD/TIM1_CH3N/TIM8_CH3N/TIM12_CH2/OTG_HS_DP
PC0/OTG_HS_ULPI_STP/ADC123_IN10/FMC_SDNWE
PC1/ETH_MDC/ADC123_IN11
PC2/SPI2_MISO/I2S2EXT_SD/OTG_HS_ULPI_DIR/ETH_MII_TXD2/FMC_SDNE0
PC3/SPI2_MOSI/I2S2_SD/OTG_HS_ULPI_NXT/ETH_MII_TX_CLK/FMC_SDCKE0
PC4/ETH_RMII_RX_D0/ETH_MII_RX_D0/ADC12_IN14
PC5/ETH_RMII_RX_D1/ETH_MII_RX_D1/ADC12_IN15
PC6/I2S2_MCK/TIM8_CH1/SDIO_D6/USART6_TX/DCMI_D0
PC7/I2S3_MCK/TIM8_CH2/SDIO_D7/USART6_RX/DCMI_D1
PC8/TIM8_CH3/SDIO_D0/TIM3_CH3/USART6_CK/DCMI_D2
PC9/I2S_CKIN/MCO2/TIM8_CH4/SDIO_D1/I2C3_SDA/DCMI_D3/TIM3_CH4
PC10/SPI3_SCK/I2S3_CK/UART4_TX/SDIO_D2/DCMI_D8/USART3_TX
PC11/UART4_RX/SPI3_MISO/SDIO_D3/DCMI_D4
PC12/UART5_TX/SDIO_CK/DCMI_D9/SPI3_MOSI/I2S3_SD/USART3_CK
PC13/TAMP_1
PC14/OSC32_IN
PC15/OSC32_OUT
PD0/FMC_D2/CAN1_RX
PD1/FMC_D3/CAN1_TX
PD2/TIM3_ETR/UART5_RX/SDIO_CMD/DCMI_D11
PD3/SPI2_SCK/I2S2_CK/USART2_CTS/FMC_CLK/DCMI_D5
PD4/USART2_RTS/FMC_NOE
PD5/USART2_TX/FMC_NWE
PD6/SPI3_MOSI/I2S3_SD/USART2_RX/FMC_NWAIT/DCMI_D10
PD7/USART2_CK/FSMC_NE1/FSMC_NCE2
PD8/FMC_D13/USART3_TX
PD9/FMC_D14/USART3_RX
PD10/FMC_D15/USART3_CK
PD11/FMC_A16/USART3_CTS
PD12/FMC_A17/TIM4_CH1/USART3_RTS
PD13/FMC_A18/TIM4_CH2
PD14/FMC_D0/TIM4_CH3
PD15/FMC_D1/TIM4_CH4
PE0/TIM4_ETR/UART8_RX/FMC_NBL0/DCMI_D2
PE1/UART8_TX/FMC_NBL1/DCMI_D3
PE2/TRACECLK/FSMC_A23/ETH_MII_TXD3/SPI4_SCK
PE3/TRACED0/FSMC_A19
PE4/TRACED1/FSMC_A20/DCMI_D4/SPI4_NSS
PE5/TRACED2/FSMC_A21/TIM9_CH1/DCMI_D6/SPI4_MISO
PE6/TRACED3/FSMC_A22/TIM9_CH2/DCMI_D7/SPI4_MOSI
PE7/FMC_D4/TIM1_ETR/UART7_RX
PE8/FSMC_D5/TIM1_CH1N/UART7_TX
PE9/FMC_D6/TIM1_CH1
PE10/FMC_D7/TIM1_CH2N
PE11/FMC_D8/TIM1_CH2/SPI4_NSS
PE12/FMC_D9/TIM1_CH3N/SPI4_SCK
PE13/FMC_D10/TIM1_CH3/SPI4_MISO
PE14/FMC_D11/TIM1_CH4/SPI4_MOSI
PE15/FMC_D12/TIM1_BKIN/
PF0/I2C2_SDA/FMC_A0
PF1/I2C2_SCL/FMC_A1
PF2/I2C2_SMBA/FSMC_A2
PF3/FMC_A3
PF4/FMC_A4
PF5/FMC_A5
PF6/TIM10_CH1/SPI5_NSS/SAI1_SD_B/UART7_RX/FMC_NIORD
PF7/TIM11_CH1/SPI5_SCK/SAI1_MCLK_B/UART7_TX/FMC_NREG
PF8/TIM13_CH1/SPI5_MISO/SAI1_SCK_B/FMC_NIOWR
PF9/TIM14_CH1/SPI5_MOSI/SAI1_FS_B/FMC_CD
PF10/FMC_INTR/DCMI_D11/LCD_DE
PF11/DCMI_12/SPI5_MOSI/FMC_SDNRAS
PF12/FMC_A6
PF13/FMC_A7
PF14/FMC_A8
PF15/FMC_A9
PG0/FMC_A10
PG1/FMC_A11
PG2/FMC_A12
PG3/FMC_A13
PG4/FMC_A14/FMC_BA0
PG5/FMC_A15/FMC_BA1
PG6/FSMC_INT2/DCMI_D12
PG7/FSMC_INT3/DCMI_D13
PG8/SPI6_NSS/USART6_RTS/ETH_PPS_OUT/FMC_SDCLK
PG9/USART6_RX/FMC_NE2/FMC_NCE3/DCMI_VSYNC
PG10/LCD_G3/FMC_NCE4_1/FMC_NE3/DCMI_D2/LCD_B2
PG11/ETH_MII_TX_EN/ETH_RMII_TX_ENFMC_NCE4_2/DCMI_D3
PG12/SPI6_MISO/USART6_RTS/LCD_B4/FMC_NE4/LCD_B1
PG13/SPI6_SCK/USART6_CTS/ETH_MII_TXD0/ETH_RMII_TXD0/FMC_A24
PG14/SPI6_MOSI/USART6_TX/ETH_MII_TXD1/ETH_RMII_TXD1/FMC_A25
PG15/USART6_CTS/DCMI_D13/FMC_SDNCAS
PH0/OSC_IN
PH1/OSC_OUT
PH2/FMC_SDCKE0
PH3/FMC_SDNE0
PH4/I2C2_SCL
PH5/I2C2_SDA
PH6
PH7
PH8
PH9
PH10
PH11
PH12
PH13
PH14
PH15
PI0
PI1
PI2
PI3
PI4
PI5
PI6
PI7
PI8
PI9
PI10
PI11
DRAM_DQM0
DRAM_DQM1
LED_IR
DCMI_D4
DCMI_D6
DCMI_D7
DRAM_D4
DRAM_D5
DRAM_D6
DRAM_D7
DRAM_D8
DRAM_D9
DRAM_D10
DRAM_D11
DRAM_D12
DRAM_A0
DRAM_A1
DRAM_A2
DRAM_A3
DRAM_A4
DRAM_A5
FLASH_IO3
FLASH_IO2
FLASH_IO0
FLASH_IO1
FLASH_CLK
DRAM_RAS
DRAM_A6
DRAM_A7
DRAM_A8
DRAM_A9
DRAM_A10
DRAM_A11
PG2
P9
DRAM_BA0
DRAM_BA1
FLASH_CS
SD_CD
DRAM_CLK
PG9
DCMI_D2
DCMI_D3
PG12
PG13
PG14
DRAM_CAS
DRAM_D16
DRAM_D17
DRAM_D18
DRAM_D19
DRAM_D20
DRAM_D21
DRAM_D22
DRAM_D23
DRAM_D24
DRAM_D25
DRAM_D26
DRAM_D27
DRAM_DQM2
DRAM_DQM3
DRAM_D28
DRAM_D29
PI8
DRAM_D30
DRAM_D31
PI11
Title
Size
B
Number
Revision
Date: 7/21/2024
Sheet of
File: E:\openMV\..\STM32_H750IB.SchDoc
Drawn By:

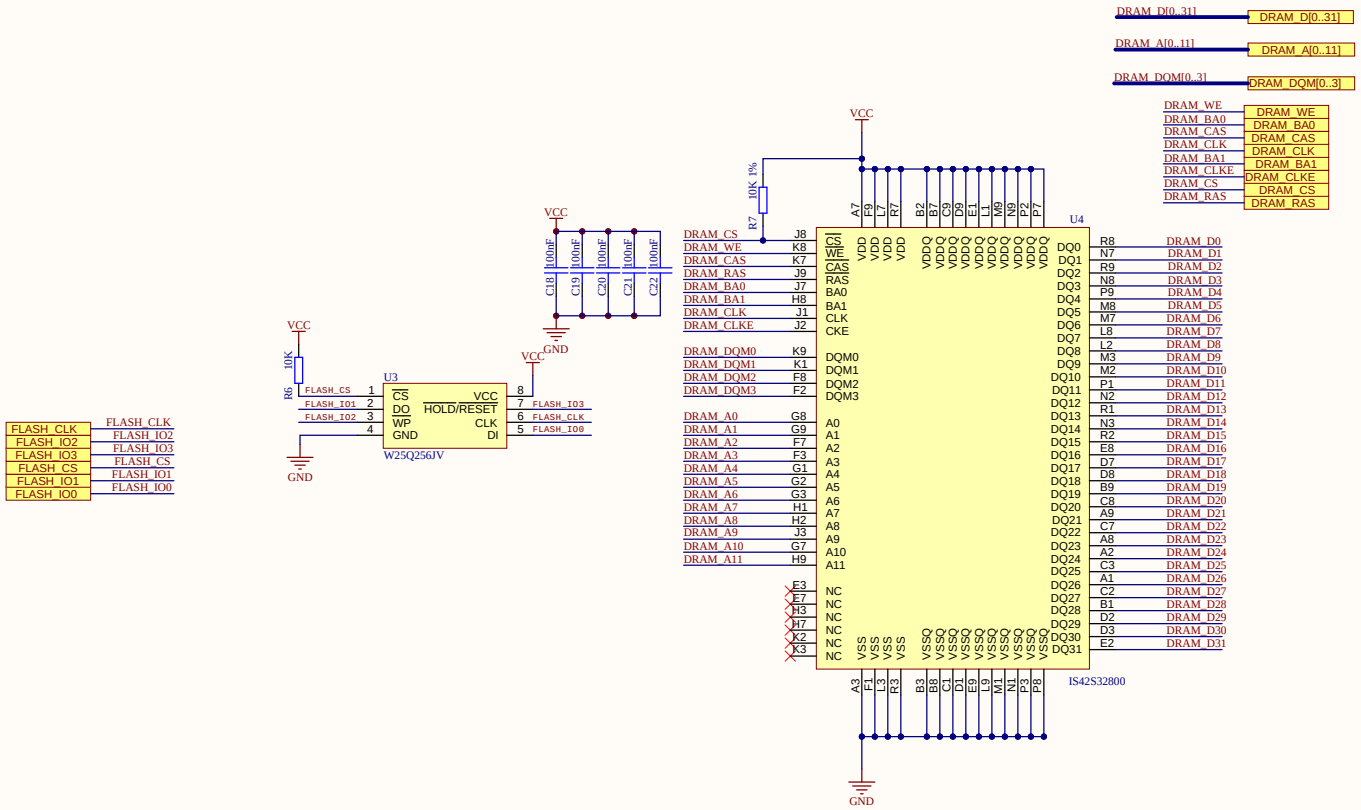

Title		
Size B	Number	Revision
Date: 7/21/2024		Sheet of
File: E:\openMV\..\Flash&SDRAM.SchDoc		Drawn By:

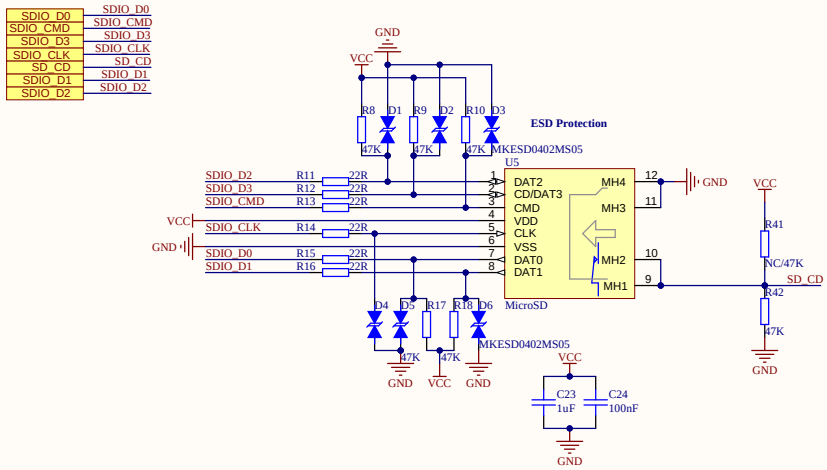
SDIO_D0
SDIO_CMD
SDIO_D3
SDIO_CLK
SD_CD
SDIO_D1
SDIO_D2
SDIO_D0
SDIO_CMD
SDIO_D3
SDIO_CLK
SD_CD
SDIO_D1
SDIO_D2
GND
VCC
R8
D1
R9
D2
R10
D3
47K
47K
47K
MKESD0402MS05
ESD Protection
U5
SDIO_D2
SDIO_D3
SDIO_CMD
SDIO_CLK
SDIO_D0
SDIO_D1
R11
R12
R13
R14
R15
R16
22R
22R
22R
22R
22R
22R
DAT2
CD/DAT3
CMD
VDD
CLK
VSS
DAT0
DAT1
MH4
MH3
MH2
MH1
MicroSD
D4
D5
R17
R18
D6
MKESD0402MS05
C23
1uF
C24
100nF
R41
NC/47K
R42
47K
SD_CD

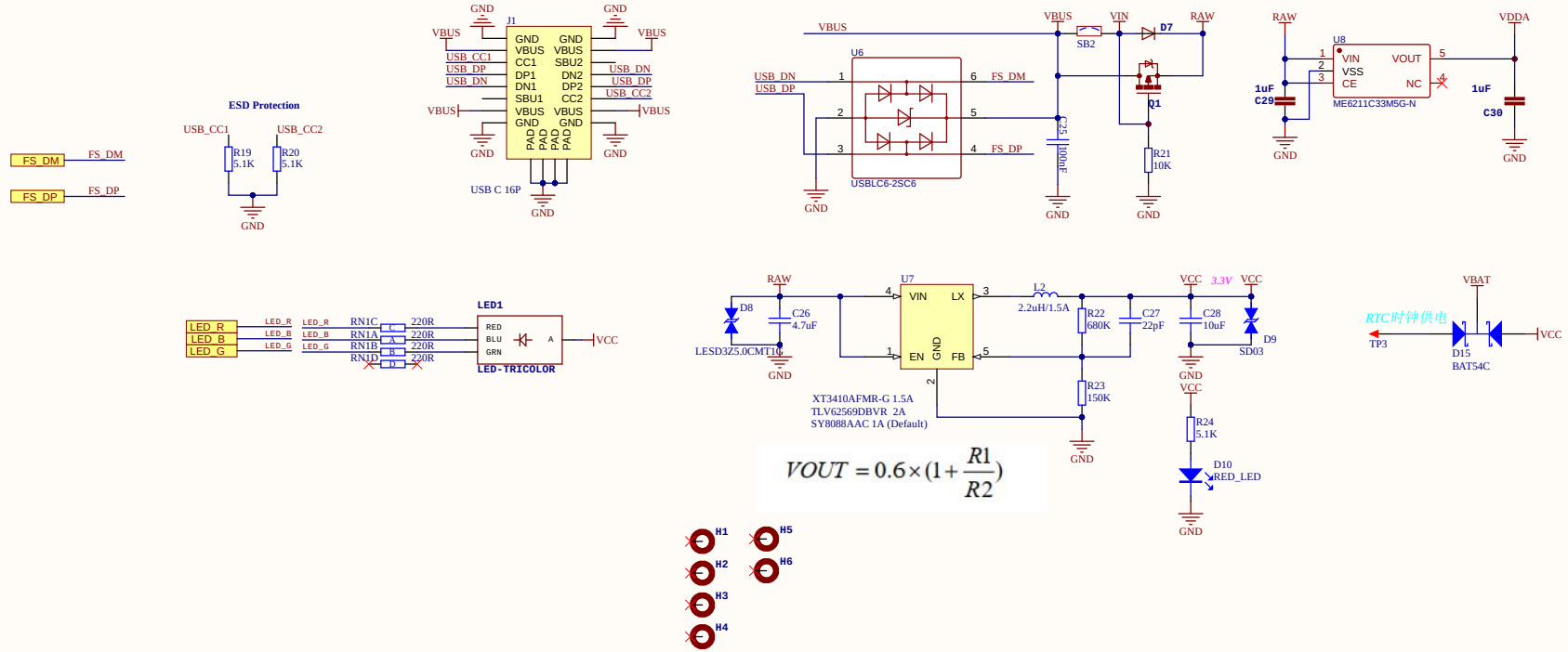

$$VOUT = 0.6 \times (1 + \frac{R1}{R2})$$

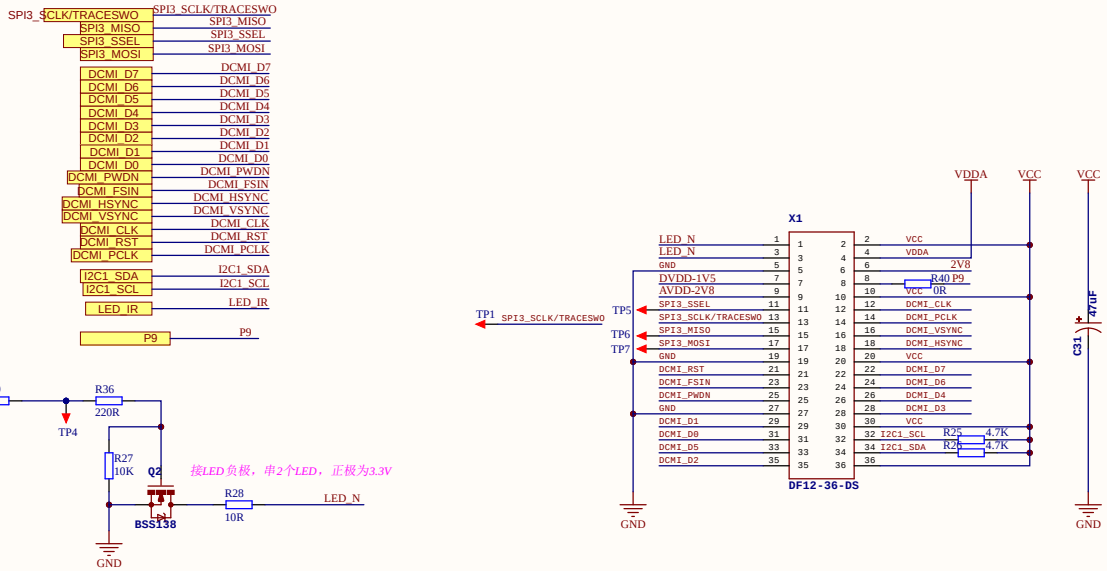
SPI3_SCLK/TRACESWO
SPI3_MISO
SPI3_SSEL
SPI3_MOSI
DCMI_D7
DCMI_D6
DCMI_D5
DCMI_D4
DCMI_D3
DCMI_D2
DCMI_D1
DCMI_D0
DCMI_PWDN
DCMI_FSIN
DCMI_HSYNC
DCMI_VSYNC
DCMI_CLK
DCMI_RST
DCMI_PCLK
I2C1_SDA
I2C1_SCL
LED_IR
P9
LED_IR
R39
0R
R36
220R
TP4
R27
10K
Q2
BSS138
接LED负极，串2个LED，正极为3.3V
R28
10R
LED_N
GND
TP1
SPI3_SCLK/TRACESWO
TP5
TP6
TP7
X1
LED_N
GND
DVDD-1V5
AVDD-2V8
SPI3_SSEL
SPI3_MISO
SPI3_MOSI
DCMI_RST
DCMI_FSIN
DCMI_PWDN
DCMI_D1
DCMI_D0
DCMI_D5
DCMI_D2
VCC
VDDA
2V8
R40 P9
0R
DCMI_CLK
DCMI_PCLK
DCMI_VSYNC
DCMI_HSYNC
DCMI_D7
DCMI_D6
DCMI_D4
DCMI_D3
R25
4.7K
R26
4.7K
I2C1_SCL
I2C1_SDA
DF12-36-DS
C31
470uF
VDDA
VCC
VCC
GND
GND

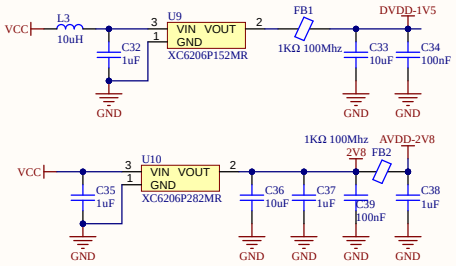
VCC
L3
10uH
U9
VIN VOUT
GND
XC6206P152MR
C32
1uF
FB1
1KΩ 100Mhz
C33
10uF
C34
100nF
DVDD-1V5
GND
GND
GND
1KΩ 100Mhz
2V8
FB2
AVDD-2V8
VCC
U10
VIN VOUT
GND
XC6206P282MR
C35
1uF
C36
10uF
C37
1uF
C39
100nF
C38
1uF
GND
GND
GND
GND
GND

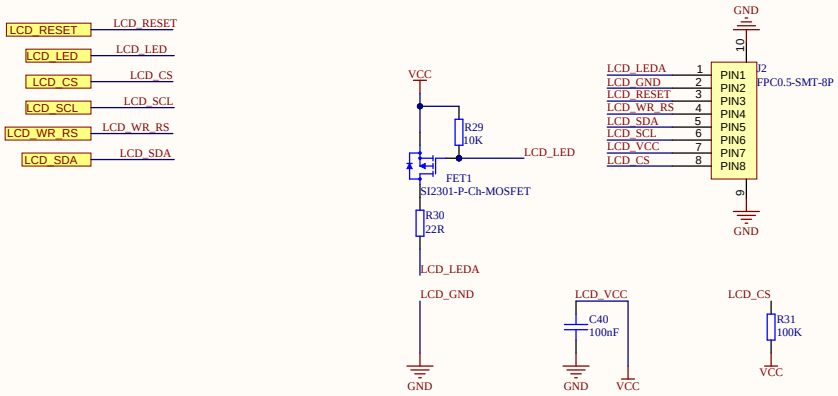
LCD_RESET
LCD_LED
LCD_CS
LCD_SCL
LCD_WR_RS
LCD_SDA
VCC
R29
10K
FET1
SI2301-P-Ch-MOSFET
R30
22R
LCD_GND
GND
LCD_VCC
C40
100nF
LCD_CS
R31
100K
GND
10
LCD_LEDA 1
LCD_GND 2
LCD_RESET 3
LCD_WR_RS 4
LCD_SDA 5
LCD_SCL 6
LCD_VCC 7
LCD_CS 8
PIN1
PIN2
PIN3
PIN4
PIN5
PIN6
PIN7
PIN8
J2
FPC0.5-SMT-8P
9
GND

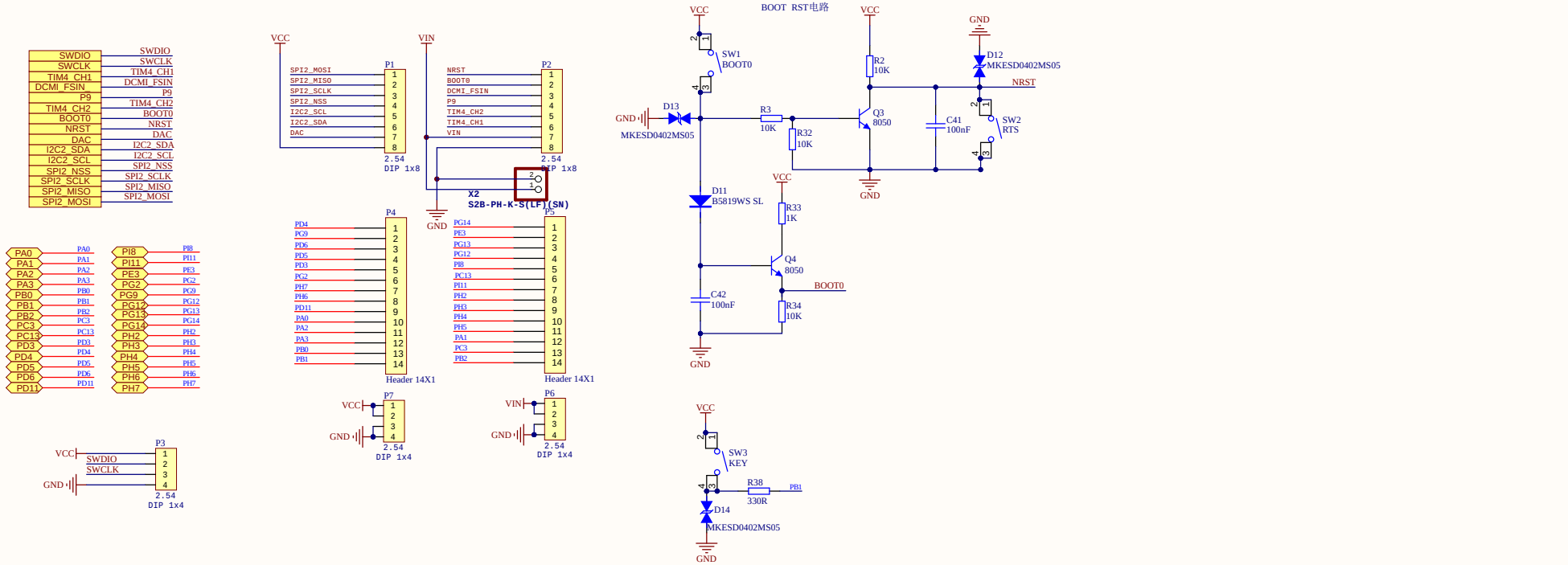
SWDIO
SWCLK
TIM4_CH1
DCMI_FSIN
P9
TIM4_CH2
BOOT0
NRST
DAC
I2C2_SDA
I2C2_SCL
SPI2_NSS
SPI2_SCLK
SPI2_MISO
SPI2_MOSI
PA0
PA1
PA2
PA3
PB0
PB1
PB2
PC3
PC13
PD3
PD4
PD5
PD6
PD11
PI8
PI11
PE3
PG2
PG9
PG12
PG13
PG14
PH2
PH3
PH4
PH5
PH6
PH7
VCC
GND
VIN
P1
P2
P3
P4
P5
P6
P7
2.54
DIP 1x8
DIP 1x4
X2
S2B-PH-K-S(LF)(SN)
Header 14X1
BOOT RST电路
SW1
BOOT0
SW2
RTS
SW3
KEY
D11
B5819WS SL
D12
MKESD0402MS05
D13
D14
R2
10K
R3
10K
R32
10K
R33
1K
R34
10K
R38
330R
C41
100nF
C42
100nF
Q3
8050
Q4
8050